PATAPSCO 3

3111 LORENA AVENUE, BALTIMORE, MD 21230

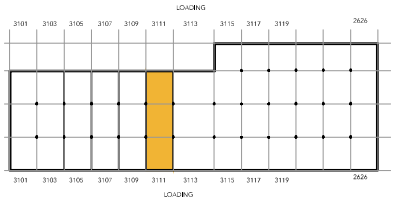

Key Plan

TOTAL SF AVAILABLE - 3,300 SF

OFFICE - 0,000 SF
WAREHOUSE - 3,300 SF

Click to access **CADD file**

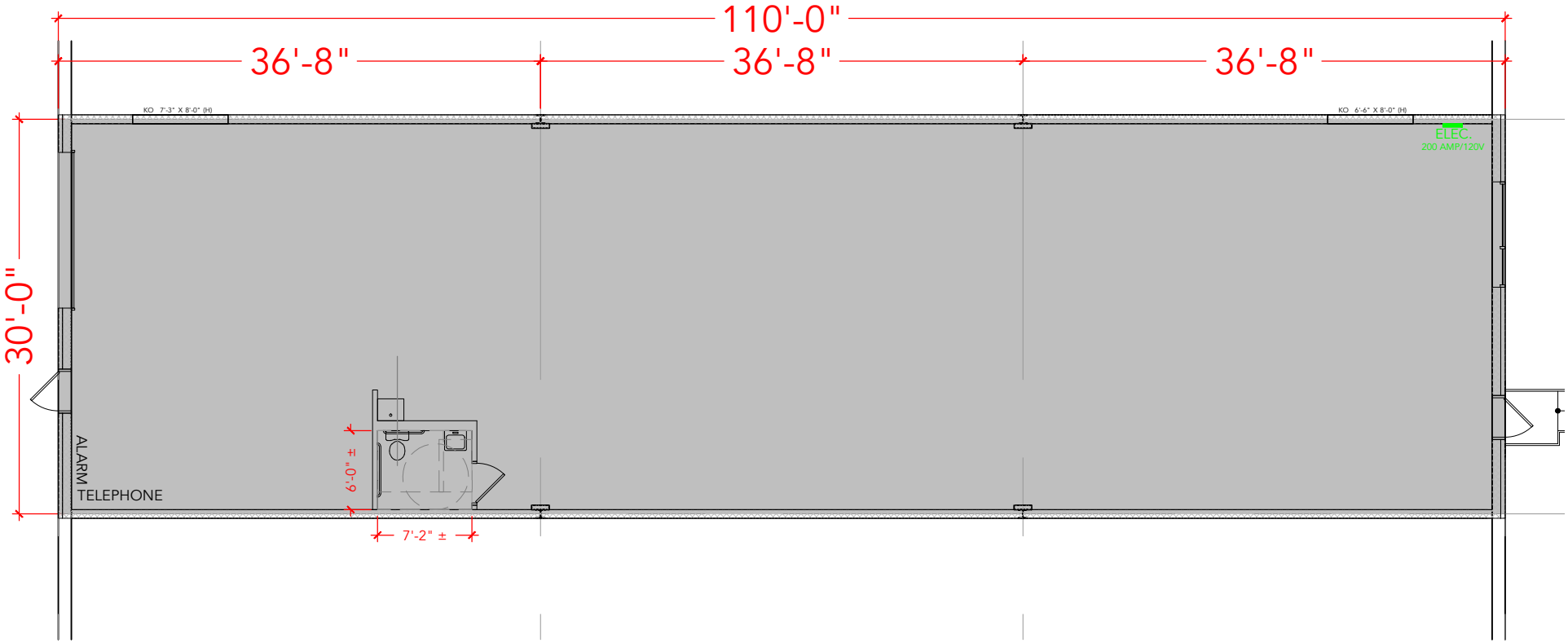

Floor Plan

PLAN NOT TO SCALE - THIS IS NOT A CONSTRUCTION DOCUMENT

DRAWING #: 019-3111 ASBUILT DATE: **NEEDS TO BE**